Designation: E 1629 – 94 (Reapproved 2001)

Standard Practice for Determining the Impedance of Absolute Eddy-Current Probes[1]

This standard is issued under the fixed designation E 1629; the number immediately following the designation indicates the year of original adoption or, in the case of revision, the year of last revision. A number in parentheses indicates the year of last reapproval. A superscript epsilon (ϵ) indicates an editorial change since the last revision or reapproval.

1. Scope

1.1 This practice covers a procedure for determining the impedance of absolute eddy-current probes (bridge-type, air or ferrite core, wire wound, shielded, or unshielded) used for finding material defects in electrically conducting material. This practice is intended to establish a uniform test methodology to measure the impedance of eddy-current probes prior to receipt of these probes by the purchaser or the specifier.

1.2 *Limitations*—This practice does not address the characterization or measurement of the impedance of differential, a-c coupled, or transmit/receive types of probes. This practice does not address the use of magnetic materials in testing probes. This practice shall not be used as a basis for selection of the best probe for a particular application or as a means by which to calibrate a probe for a specific examination.

1.3 The values stated in SI units are to be regarded as the standard. The values given in parentheses are for information only.

1.4 *This standard does not purport to address all of the safety concerns, if any, associated with its use. It is the responsibility of the user of this standard to establish appropriate safety and health practices and determine the applicability of regulatory limitations prior to use.*

2. Referenced Documents

2.1 The following document forms a part of this practice to the extent specified herein:

2.2 *ASTM Standards:*

E 1316 Terminology for Nondestructive Examination[2]

3. Terminology

3.1 *Definitions*—The terminology relating to eddy-current examination that appears in Terminology E 1316 shall apply to the terms used in this practice.

3.2 *Definitions of Terms Specific to This Standard:*

3.2.1 *eddy-current test block— for the purposes of the method described in this practice*, a rectangular block made of an aluminum alloy (see 6.1.2) to which an active eddy-current probe is applied.

3.3 *Mathematical Symbols*:

3.3.1 *j*—a symbol used in electrical engineering to represent $\sqrt{-1}$. It is associated with the restriction to the flow of electrical current caused by capacitors and coils.

3.3.2 *N*— any number.

3.3.3 $|N|$—the magnitude of *N*, regardless whether *N* is positive, negative, or a vector quantity.

3.3.4 $\sqrt{N}$ —the square root of *N*.

3.3.5 $(N)^2$—*N* squared, that is, $N \times N$.

3.3.6 ΔN— delta *N*, the change or difference in *N*.

3.4 *Abbreviations:Abbreviation:*

3.4.1 *tan*—used for the tangent function. The $\tan^{-1}$, arctangent or inverse tangent function, returns a value that is a measure of an angle and can be in either degrees or radians. When using a calculator to determine the $\tan^{-1}$, care should be taken to determine whether the answer is in degrees or radians since the numerical values that represent the same angle are different.

4. Significance and Use

4.1 Eddy-current probes may be used for the nondestructive examination of parts or structures made of electrically conducting materials. Many of these examinations are intended to discover material defects, such as fatigue cracks, that may cause the part or structure to be unsafe or unfit for further service. Eddy-current probes that fail to meet the performance level requirements of this practice shall not be used for the examination of material or hardware unless the probe is qualified by some other system or an agreement has been reached by the probe manufacturer and the purchaser, or both.

5. General Practice

5.1 *Use of Test Blocks*—The test blocks described in this practice shall not be used for purposes other than measuring the impedance of eddy-current probes as specified in this practice.

[1] This practice is under the jurisdiction of ASTM Committee E07 on Nondestructive Testing and is the direct responsibility of Subcommittee E07.07 on Electromagnetic Method.

Current edition approved Sept. 15, 1994. Published November 1994.

[2] *Annual Book of ASTM Standards*, Vol 03.03.

Copyright © ASTM International, 100 Barr Harbor Drive, PO Box C700, West Conshohocken, PA 19428-2959, United States.

They shall not be used for standardizing an examination or for determining flaw sensitivity.

5.2 *Responsibility*—Initial determination of the impedance values of eddy-current probes shall be performed by the probe manufacturer in accordance with this practice. The results shall be delivered with the probe and maintained by the using organization. While the retesting of probes may be performed using this practice, only the results obtained before the probe is in use should be compared to the initial impedance values. The impedance results should not be compared to the initial values after a probe has been used.

6. Specific Practice

6.1 *Test Method*—Impedance measurements shall be made on an aluminum alloy test block with a machined slot that conforms to the requirements of this practice. The operating frequency (as specified by the probe manufacturer) may vary for each probe examined, depending on the specific probe geometry, skin depth, matching impedance, desired signal strength, and application. A commercial impedance measuring instrument that conforms to 6.1.1 shall be used to make the measurements. The measurements will be recorded on the worksheet (Appendix X1) to calculate the probe impedance. The calculated values shall be compared to the acceptable criteria (6.3) to determine probe acceptability.

6.1.1 *Test Equipment*—The test instrument shall be either a commercial impedance measuring instrument or an LCR meter with an oscillator capable of driving a current in the probe at the probe's operating frequency. The output shall display the probe impedance in either polar form, providing a magnitude and a phase angle, or rectangular form, providing resistive and reactive components of the impedance, or both. This instrument shall be calibrated in accordance with the manufacturer's specifications at the required interval.

6.1.2 *Test Blocks*—The test block shall be fabricated from 7075-T6 aluminum alloy 1.9-cm (0.75-in.) thick, with slotted holes for testing bolt hole probes and a slotted flat section for testing surface probes. All test surfaces shall be polished to an average finish ≤ 15 µm (591 µin.). The conductivity of the aluminum alloy should be between 30 and 35 % IACS.

6.1.2.1 The slotted flat section shall have side measurements of at least six times the coil diameter or 5.1 by 5.1 cm (2 by 2 in.), whichever is larger. The slot dimensions shall be machined across the block's surface and shall measure at least 5.0 cm (2-in.) long. The slot cross section shall measure 0.1 ± 0.01 mm (0.004 ± 0.004 in.) wide and 0.5 ± 0.025 mm (0.02 ± 0.001 in.) deep.

6.1.2.2 The test holes shall be made for all of the nominal sizes of bolt hole probes to be examined. The edges of the holes shall be spaced 1.9-cm (0.75-in.) apart from each other and from the block edges. The slot shall run the entire length of the hold and will be 0.1 ± 0.01-mm (0.004 ± 0.0004-in.) wide and 0.5 ± 0.025-mm (0.02 ± 0.001-in.) deep.

6.1.2.3 Fig. 1 shows a representative test block with the holes used for testing two different sizes of bolt hole probes. The length of the block (x + 5.1 cm) depends on the number and size of the test holes required by the user, as well as the amount of clearance required between each hole and the block's edges.

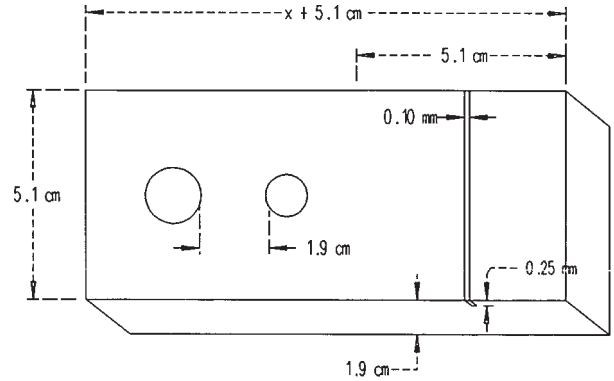

FIG. 1 Representative Test Block

6.2 *Measurement Procedure*:

6.2.1 *Measurements*—Impedance values can be expressed in different ways. Impedances are most commonly given in either rectangular or polar form. In polar form, the impedance is expressed as a magnitude, $|Z|$, with a corresponding phase angle, θ, and often appears as $|Z| \angle \theta$. The rectangular form expresses the impedance as a combination of a resistive component, R, and a reactive or imaginary (denoted by j) component, X. This form often appears as $R \pm jX$. Fig. 2 shows two points measured in both forms and the resulting impedance change (ΔZ) calculation. This is typical of the way in which impedance changes are measured on actual eddy-current probes using the test method specified in this practice. The impedance of a probe is measured first off the slot and then on the slot in this method, and the difference between these two measurements is calculated. An error may occur in the calculations if appropriate coordinate conversions are not made (addition and subtraction are performed on rectangular coordinates and multiplication and division on polar coordinates).

6.2.1.1 All performance tests shall be conducted within the temperature range from 15 to 27°C (60 to 80°F). The probe test frequency shall depend on the rated operating frequency of the particular probe under test (see X1.4.2.3).

6.2.2 *Probe Impedance in Air*—Attach the probe to the impedance measuring instrument, and position the probe at least 50.8 mm (2 in.) away from any electrically conducting material or hardware, or both. Measure the impedance and record the impedance values on the worksheet. Compare the measurement to the values listed in 6.3.1.

6.2.3 *Average Off-Slot Probe Impedance*— Place the probe on the surface of or in the hole in the test block, as appropriate. For a surface probe, place the probe on four different positions on the face of the block. The center of each position shall be at

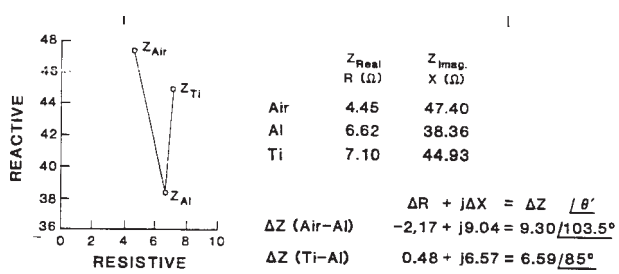

FIG. 2 Rectangular and Polar Coordinates and Resulting ΔZ

least four coil diameters from any edge, slot, or hole. For a bolt hole probe, rotate the probe face in the hole to four different positions that are away from the slot and the top and bottom of the hole. Measure the impedance and record the four impedance values on the worksheet in either polar or rectangular coordinates. If necessary, convert the polar values to R_{off} and X_{off}(resistive and reactive components). Calculate the magnitude of each of the measurements and record them on the worksheet. Determine the variation (scatter) in the magnitudes of the measurements and compare it to the requirements given in 6.3.2. When acceptable values are obtained, average the four values to calculate $R_{off\ avg}$ and $X_{off\ avg}$. Record the averages on the worksheet.

6.2.4 *Maximum On-Slot Impedance*—Position the probe face on the slot to obtain a maximum impedance reading. Perform this procedure four times, and record the four resulting impedances in rectangular coordinates, R_{on} and X_{on}, on the worksheet. Average the four values to calculate $R_{on\ avg}$ and $X_{on\ avg}$. Record the averages on the worksheet.

6.2.5 *Probe Performance Criterion*—The probe impedance change caused by the slot, ΔZ, is the magnitude of $R_{on\ avg} - R_{off\ avg}$ and $X_{on\ avg} - X_{off\ avg}$. The fractional change is the absolute value of ΔZ divided by $|Z_{off\ avg}|$. Appendix X1 contains the formulas for calculating the values of $|\Delta Z|$ and$|Z_{off\ avg}|$. Record the calculated values on the worksheet and compare them to the requirements of 6.3.3 to determine acceptance.

6.3 *Acceptance Criteria*—Acceptance of a probe being characterized by this practice requires that it meet all of the following criteria:

6.3.1 *Probe Impedance in Air*—Unless otherwise specified, the magnitude of the probe impedance in air shall be between 20 and 1000 Ω, and the phase shall be between 70 and 90 deg. An impedance value below 20 Ω indicates the possibility of a short circuit in the probe coil, and a value above 1000 Ω indicates a possible open circuit.

6.3.1.1 The magnitude of the impedance in air shall be within 10 % of the value specified for that type of probe by the probe manufacturer and be within the input impedance range specified for the measuring instrument.

6.3.2 *Measurement Scatter*—A variation greater than 4 % among the off-slot impedance measurements indicates that the values are too scattered. The measurements must be repeated using greater care in holding the surface probe more securely or fitting the bolt hole probe more snugly in the hole. Repeated high variation indicates that an analysis of the system should be performed using different examiners or known acceptable probes. The probe is unacceptable if the measurement scatter cannot be reduced to the acceptable value.

6.3.3 *Probe Impedance Ratio*—These ratios will be determined by agreement between the eddy-current probe manufacturer and the probe purchaser.

7. Keywords

7.1 absolute eddy-current probes; eddy-current probes; impedance; nondestructive testing

APPENDIXES

(Nonmandatory Information)

X1. WORKSHEET FOR CALCULATION OF RESULTS

X1.1 General

X1.1.1 *Scope*—This appendix provides mathematical formulas and a worksheet for recording measurements and calculating results. It is recommended that the worksheet in this practice be left blank and photocopied for each probe tested. Appendix X2 contains an example of a completed worksheet.

X1.2 General Practice

X1.2.1 These measurements should be performed using a test instrument that displays impedance in polar or rectangular coordinates, or both. To perform the necessary calculations, both forms of complex impedance (polar and rectangular) are necessary. Mathematical conversion will be necessary if the test instrument does not display the impedance in both forms.

X1.2.1.1 *Polar to Rectangular Conversion*—The conversions from polar ($|Z| \angle \theta$) to rectangular ($R \pm jX$) can be performed using the following formulas:

$$R = |Z| \cos \theta \qquad X = |Z| \sin \theta \tag{X1.1}$$

The use of a calculator with trigonometric functions is recommended. The abbreviation "cos" is used for the cosine function, and the abbreviation "sin" is used for the sine function.

X1.2.1.2 *Rectangular to Polar Conversion*—The conversions from rectangular ($R \pm jX$) to polar ($|Z| \angle \theta$) can be performed using the following formulas:

$$|Z| = \sqrt{R^2 + X^2} \qquad \theta = \tan^{-1}(X/R) \tag{X1.2}$$

X1.3 Specific Practice

X1.3.1 It will be necessary to perform the following calculations after recording the measured impedances:

X1.3.1.1 *Average Value*— This involves adding the four measurement values ($R_1 + R_2 + R_3 + R_4$ and $X_1 + X_2 + X_3 + X_4$), dividing the totals by four, and recording those results in the appropriate space on the worksheet (see X1.4.6.1 or X1.4.6.2).

X1.3.1.2 *Impedance Magnitude*— $|Z| = \sqrt{R^2 + X^2}$.

X1.3.1.3 *Measurement Scatter*—A percentage value obtained by choosing the highest and lowest values from the four off-flaw impedance magnitudes and applying the following formula:

$$[(\text{highest value} - \text{lowest value})/\text{highest value}] \times 100 \qquad \text{(X1.3)}$$

X1.3.1.4 *Probe Impedance Change*—The average probe impedance calculated for the off-slot impedance is subtracted from the average maximum on-slot impedance measurement. The impedance change in rectangular form is converted to a polar magnitude, $|\Delta Z|$.

X1.4 Measurement Worksheet

X1.4.1 Operator's Name/ID and Date ____.

X1.4.2 *Measurement Instrument:*

X1.4.2.1 Type of instrument used ____,

X1.4.2.2 Instrument make and model number ____, and

X1.4.2.3 Instrument calibration date ____.

X1.4.3 *Probe Identification*:

X1.4.3.1 Manufacturer and serial number ____,

X1.4.3.2 *Probe Type*— bolt hole (size) ____, surface ____, other (specify) ____,

X1.4.3.3 Nominal operating frequency ____, and

X1.4.3.4 Specified impedance in air ____.

X1.4.4 *Temperature*:

X1.4.4.1 *Range*—The test shall be conducted within the temperature range from 15 to 27°C (60 to 80°F),

X1.4.4.2 Ambient (room) temperature ____ °C, and

X1.4.4.3 Thermocouple used and calibration date ____.

X1.4.5 *Measure Probe Impedance in Air*—Position the probe away from any metal (at least 50.8 mm (2 in.) away from any electrically conducting material or hardware), attach it to the impedance measuring instrument, and set the frequency to the manufacturer's specified operating frequency. Record the impedance in rectangular and polar coordinates (see X1.2.1.1 and X1.2.1.2 if conversions are necessary).

	R	jX	$\lvert Z\rvert$	θ
Impedance =	_____	_____ (Ω),	_____ (Ω),	_____ (°)

Check $|Z|$ and θ for proper values (see 6.3.1).

X1.4.6 *Measure Probe Impedance on Test Block*:

X1.4.6.1 *Off-Slot Impedance*—The surface probes should be at least four coil diameters from the slot, holes, or edges of the block. The coil of a bolt hole probe should be near the center of the thickness of the test block (see 6.2.3). Record the impedance measurements, in rectangular coordinates (R_{off} and X_{off}), for each of the four positions indicated. Calculate and record the impedance magnitude, $|Z_{off}|$, for each measurement:

		R_{off}	jX_{off}	$\lvert Z_{off}\rvert$	θ
Z_{off} =	(1)	_____	_____ (Ω),	_____ (Ω)	_____ °
	(2)	_____	_____ (Ω),	_____ (Ω)	_____ °
	(3)	_____	_____ (Ω),	_____ (Ω)	_____ °
	(4)	_____	_____ (Ω),	_____ (Ω)	_____ °

Add each column: Total = ____ ____ (Ω)

Divide by 4: $Z_{off\ avg}$ = ____ ____ (Ω)

convert $R_{off\ avg} + jX_{off\ avg}$ to $|Z_{off\ avg}|$ using: $|Z_{off\ avg}|$

$$= \sqrt{(R_{off\ avg})^2 + (X_{off\ avg})^2}$$

$(R_{off\ avg})^2$ = _____, $(X_{off\ avg})^2$ = _____

$(R_{off\ avg})^2 + (X_{off\ avg})^2$ = _____

$|Z_{off\ avg}| = \sqrt{(R_{off\ avg})^2 + (X_{off\ avg})^2}$ = _____

Calculate and record the impedance measurement scatter: Subtract lowest $|Z_{off}|$ from highest $|Z_{off}|$ and divide by highest. Multiply this value by 100 to get measurement scatter.

$$\text{Measurement Scatter} = \frac{|Z_{off\ high}| - |Z_{off\ low}|}{|Z_{off\ high}|} \times 100\ \%$$

highest $|Z_{off}|$ = _____ Measurement scatter = _____ %

lowest $|Z_{off}|$ = _____

X1.4.6.2 *On-Slot Probe Impedance*—Position the probe to obtain the highest impedance reading with the probe coil positioned on the slot. Perform this measurement four times and record the impedance measurements. Using the rectangular coordinates (R_{on} and X_{on}), calculate and record the average impedance magnitude, $|Z_{on\ avg}|$:

		R_{on}	jX_{on}	$\lvert Z_{on}\rvert$	θ
Z_{on} =	(1)	_____	_____ (Ω),	_____ (Ω)	_____ °
	(2)	_____	_____ (Ω),	_____ (Ω)	_____ °
	(3)	_____	_____ (Ω),	_____ (Ω)	_____ °
	(4)	_____	_____ (Ω),	_____ (Ω)	_____ °

Add each column: Total = ____ ____ (Ω)

Divide by 4: $Z_{on\ avg}$ = ____ ____ (Ω)

convert $R_{on\ avg} + jX_{on\ avg}$ to $|Z_{on\ avg}|$ using: $|Z_{on\ avg}|$

$$= \sqrt{(R_{on\ avg})^2 + (X_{on\ avg})^2}$$

$(R_{on\ avg})^2$ = _____, $(X_{on\ avg})^2$ = _____

$(R_{on\ avg})^2 + (X_{on\ avg})^2$ = _____

$|Z_{on\ avg}| = \sqrt{(R_{on\ avg})^2 + (X_{on\ avg})^2}$ = _____

X1.4.7 *Probe Impedance Change*—Obtain ΔZ by subtracting the average value of the off-slot impedance from the on-slot impedance:

$$\Delta R + j\Delta X = (R_{on\ avg} - R_{off\ avg}) + j(X_{on\ avg} - X_{off\ avg})$$

	R	jX
on-slot impedance =	_____	_____ (Ω)
off-slot average impedance =	_____	_____ (Ω)

	ΔR	$j\Delta X$
probe $\Delta R + j\Delta X$ =	_____	_____ (Ω),

convert $\Delta R + j\Delta X$ to $|\Delta Z|$ using: $|\Delta Z| = \sqrt{(\Delta R)^2 + (\Delta X)^2}$

$(\Delta R)^2$ = _____, $(\Delta X)^2$ = _____

$(\Delta R)^2 + (\Delta X)^2$ = _____

$|\Delta Z| = \sqrt{(\Delta R)^2 + (\Delta X)^2}$ = _____

X1.4.8 *Probe Acceptance Criteria Values*:

probe impedance in air: $|Z_{air}|$ = _____ Angle = _____

$100 \times |Z_{manufacturer} - Z_{air}|/Z_{manufacturer}$ = _____

Measurement scatter = ____

Probe impedance ratio:

Divide $|\Delta Z|$ by $|Z_{off\ avg}|$: $|\Delta Z|/|Z_{off\ avg}|$ =

X2. EXAMPLE WORKSHEET

X2.1 Example Worksheet

NOTE X2.1—Example values may differ from actual probe values due to variations in probe types and operating frequencies.

X2.1.1 Operator's Name/ID and Date: L. Dulcie/NIST-11/94/92.

X2.1.2 *Measurement Instrument*:

X2.1.2.1 Type of instrument used: Impedance Analyzer,

X2.1.2.2 Instrument make and model number: HP4194A, and

X2.1.2.3 Instrument calibration date: 9/10/92.

X2.1.3 *Probe identification*:

X2.1.3.1 Manufacturer and serial number: NIST No. FC2MS25,

X2.1.3.2 *Probe Type*— bolt hole (size) , surface: Ferrite core, other (specify): Surface Probe on Flaw C11 (9 by 3 by 0.1 mm),

X2.1.3.3 Nominal operating frequency: 500 kHz, and

X2.1.3.4 Specified impedance in air: 500 Ω.

X2.1.4 *Ambient (room) temperature*:

21°C,

X2.1.4.1 Thermocouple used: Fluke 52 K/J Thermometer, and

X2.1.4.2 Calibration date: 5/12/92.

X2.1.5 *Measure Probe Impedance in Air*:

	R	jX	$\|Z\|$	θ
Impedance =	15.67	487.85 (Ω),	488.10 (Ω),	88.16(°)

X2.1.6 *Measure Probe Impedance on Test Block:*

X2.1.6.1 *Off-Slot Probe Impedance*:

	R_{off}	jX_{off}	$\|Z_{off}\|$
Z_{off} =	(1) 34.92	297.48 (Ω),	299.52 (Ω)
	(2) 34.91	297.50 (Ω),	299.54 (Ω)
	(3) 34.86	297.56 (Ω),	299.60 (Ω)
	(4) 34.91	297.50 (Ω),	299.54 (Ω)

Add each column: Total = 139.60 1190.04 (Ω)
Divide by 4: $Z_{off\ avg}$ = 34.90 297.51 (Ω)

convert $R_{off\ avg} + jX_{off\ avg}$ to $|Z_{off\ avg}|$ using: $|Z_{off\ avg}| = \sqrt{(R_{off\ avg})^2 + (X_{off\ avg})^2}$

$(R_{off\ avg})^2 = 1218.01$, $(X_{off\ avg})^2 = 88\ 512.20$

$(R_{off\ avg})^2 + (X_{off\ avg})^2 = 89\ 730.20$

$|Z_{off\ avg}| = \sqrt{89\ 730.20} = 299.55$

X2.1.6.2 *On-Slot Probe Impedance:*

	R_{on}	jX_{on}	$\|Z_{on}\|$
Z_{on} =	(1) 41.25	319.75 (Ω),	322.40 (Ω)
	(2) 41.25	319.75 (Ω),	322.40 (Ω)
	(3) 41.25	319.75 (Ω),	322.40 (Ω)
	(4) 41.25	319.75 (Ω),	322.40 (Ω)

Add each column: Total = 165.00 1279.00 (Ω)
Divide by 4: $Z_{on\ avg}$ = 41.25 319.75 (Ω)

convert $R_{on\ avg} + jX_{on\ avg}$ to $|Z_{on\ avg}|$ using: $|Z_{on\ avg}| = \sqrt{(R_{on\ avg})^2 + (X_{on\ avg})^2}$

$|Z_{on\ avg}| = 322.40$

X2.1.7 *Probe Impedance Change*:

$$\Delta R + j\Delta X = (R + j\Delta X_{on\ avg} - R + j\Delta X_{off\ avg}) + j(X_{on\ avg} - X_{off\ avg})$$

	R	jX
on-slot average impedance =	41.25	319.75 (Ω)
off-slot average impedance =	34.90	297.51 (Ω)
	ΔR	$j\Delta X$
probe $\Delta R + j\Delta X$ =	6.35	22.24 (Ω),

convert $\Delta R + j\Delta X$ to $|\Delta Z|$ using: $|\Delta Z| = \sqrt{(\Delta R)^2 + (\Delta X)^2}$

$(\Delta R)^2 = 40.32$, $(\Delta X)^2 = 494.62$

$(\Delta R)^2 + (\Delta X)^2 = 534.94$

$|\Delta Z| = \sqrt{534.94} = 23.13$

X2.1.8 *Probe Acceptance Criteria Values:*

X2.1.8.1 *Probe Impedance in Air*:

$|Z_{air}| = 488.10\ \Omega$, Angle = 88.16°

(*1*) *Probe Impedance Range in Air:*

$20 < |Z_{air}| < 1000\ \Omega$ . . . OK 70° < Angle < 90° . . . OK

(*2*) *Comparison of Manufacturer's Specified Impedance in Air to Measured Probe Impedance in Air:*

$|Z_{manufacturer}| = 500\ \Omega$

$100 \times (|Z_{manufacturer}| - |Z_{air}|)/Z_{manufacturer}$

$= 100 \times (500 - 488.10)/500 = 2.4\ \%$

percent difference < 10 % . . . OK

X2.1.8.2 *Measurement Scatter:*

$|Z_{off\ high}| = 299.60$, $|Z_{off\ low}| = 299.52$

$|Z_{off\ high}| - Z_{off\ low}| \times 100\ \%/|Z_{off\ high}|$

$= (299.6 - 299.52) \times 100/299.6 = 0.03\ \%$

scatter < 4 % . . . OK

X2.1.8.3 *Probe Impedance Ratio:*

$|\Delta Z| = 23.18\Omega$, $|Z_{off\ avg}| = 299.55\ \Omega$

$|\Delta Z|/|Z_{off\ avg}| = 23.13/299.55 = 0.08$

impedance ratio > 0.04 (see Note X2.2) . . . OK

NOTE X2.2—The manufacturer determined that the minimum acceptable impedance ratio was 0.04 for this type of probe. This number came from the measurement of several probes manufactured with the same parameters that also met other minimum electrical criteria.

X2.1.8.4 *Acceptance/Rejection Decision*—All values fall within the specified acceptance criteria. The example probe is acceptable in accordance with this practice.

ASTM International takes no position respecting the validity of any patent rights asserted in connection with any item mentioned in this standard. Users of this standard are expressly advised that determination of the validity of any such patent rights, and the risk of infringement of such rights, are entirely their own responsibility.

This standard is subject to revision at any time by the responsible technical committee and must be reviewed every five years and if not revised, either reapproved or withdrawn. Your comments are invited either for revision of this standard or for additional standards and should be addressed to ASTM International Headquarters. Your comments will receive careful consideration at a meeting of the responsible technical committee, which you may attend. If you feel that your comments have not received a fair hearing you should make your views known to the ASTM Committee on Standards, at the address shown below.

This standard is copyrighted by ASTM International, 100 Barr Harbor Drive, PO Box C700, West Conshohocken, PA 19428-2959, United States. Individual reprints (single or multiple copies) of this standard may be obtained by contacting ASTM at the above address or at 610-832-9585 (phone), 610-832-9555 (fax), or service@astm.org (e-mail); or through the ASTM website (www.astm.org).